baridi

Parts Information

4-in-1 Smart Monobloc Wall-Mounting Air Conditioning Unit 12,000Btu/hr - White

Model No. DH433

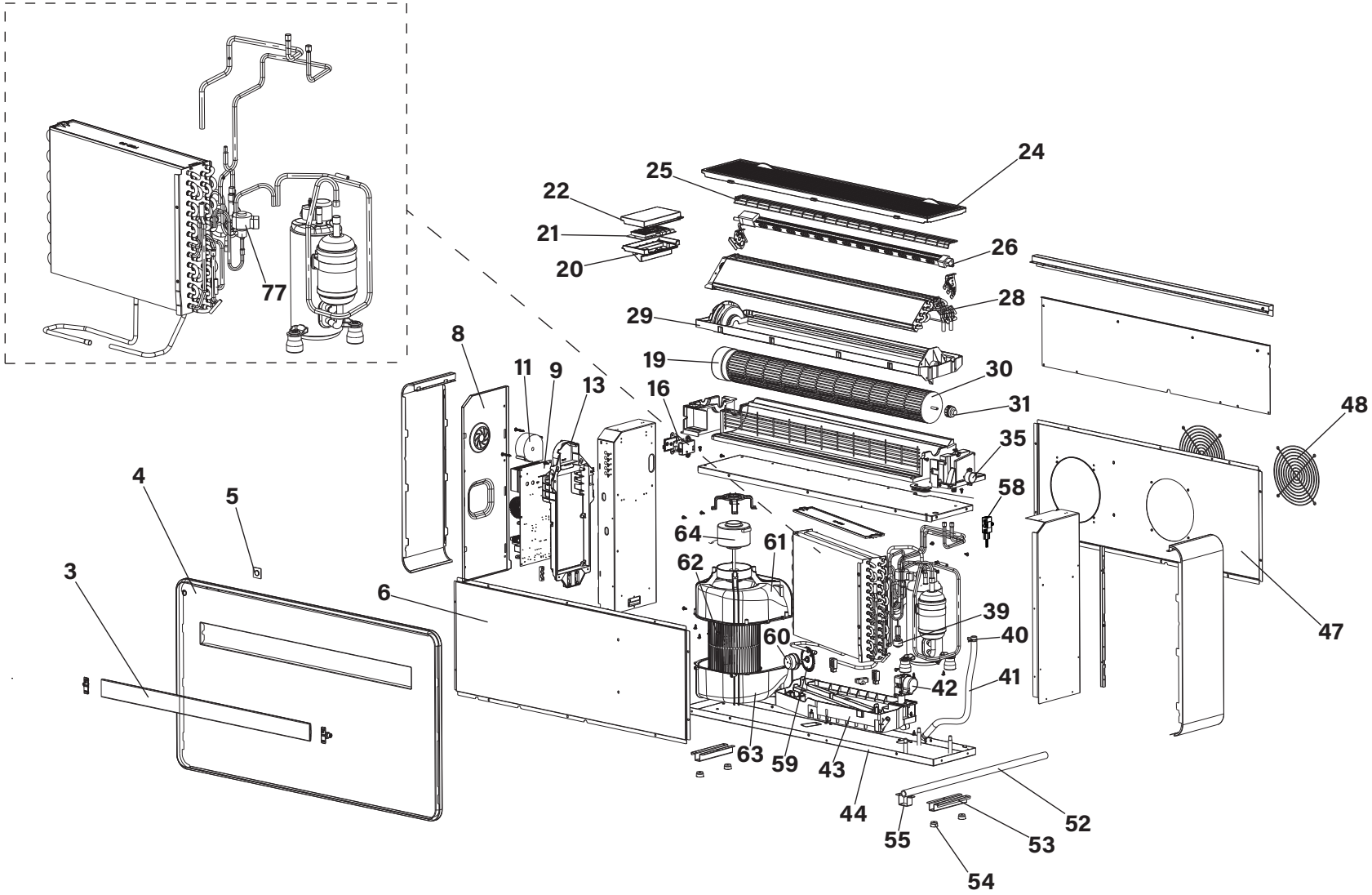

© Jack Sealey Limited

Parts Information

4-in-1 Smart Monobloc Wall-Mounting Air Conditioning Unit 12,000Btu/hr - White

Model No. DH433

Item	Part No.	Description
3	DH12167	Air Deflector
4	DH12168	Front Panel
5	DH12169	Receiver, Remote Control
6	DH12170	Front Cover
8	DH12171	PCB Box Cover
9	DH11209	PCB 12K
11	DH12172	Cooling Fan
13	DH12173	PCB Box
16	DH11211	Wifi Module
19	DH11213	DC Brushless Motor (Air Supply)
20	DH12174	Display Panel Box
21	DH11210	Display Board
22	DH12175	Display Panel Box Cover
24	DH11216	Filter
25	DH12176	Air Intake Grill
26	DH12177	PTC Heater
28	DH12178	Evaporator Assembly
29	DH12179	Water Collection Tray A
30	DH12180	Air Intake Fan Blade
31	DH12181	Sleeve, Rotor Shaft
35	DH11215	Stepper Motor
39	DH12182	Water Level Switch
40	DH12183	Torsion Spring
41	DH12184	Water Pipe

Item	Part No.	Description
42	DH12185	Switch Assembly, Water Release
43	DH12186	Water Collection Tray B
44	DH12187	Base
47	DH12188	Rear Panel
48	DH12189	Rear Ventilation Grill
52	DH11212	Drainage Pipe
53	DH12190	Foot Support
54	DH12191	Rubber Foot
55	DH12192	Drainage Pipe Support
58	DH12199	Leak Detector
59	DH12193	Water Wheel
60	DH12194	DC Motor Pump
61	DH12195	Lower Air Duct A
62	DH12196	Exhaust Fan Blade
63	DH12197	Lower Air Duct B
64	DH11214	DC Brushless Motor (Air Exhaust)
77	DH11502	Electronic Expansion Valve
--	DH11202	Air Duct Inner Cover (Not Shown)
--	DH11203	Air Duct Outer Cover (Not Shown)
--	DH11204	Spring And Chain (Not Shown)
--	DH11205	Wall Template (Not Shown)
--	DH11206	Ducting Sheet (Not Shown)
--	DH11207	Remote Control (Not Shown)

Note: It is our policy to continually improve products and as such we reserve the right to alter data, specifications and component parts without prior notice. See www.baridi.com for the latest information.
Important: No liability is accepted for incorrect use of product. Spare parts must be fitted by a competent person.

Jack Sealey (EU) Ltd t/a Baridi Farney Street, Carrickmacross, Co. Monaghan, A81 PK68 Ireland
Jack Sealey Ltd t/a Baridi Kempson Way, Suffolk Business Park, Bury St Edmunds, Suffolk, IP32 7AR UK
Tel: 01284 757575 ▪ **Email:** support@baridi.com ▪ **Web:** www.baridi.com

© Jack Sealey Limited